Drawing Revision History		
Revision	Description/Change	Date
C	Released	28/08/26

FX-DFP70
70mm Thick Door

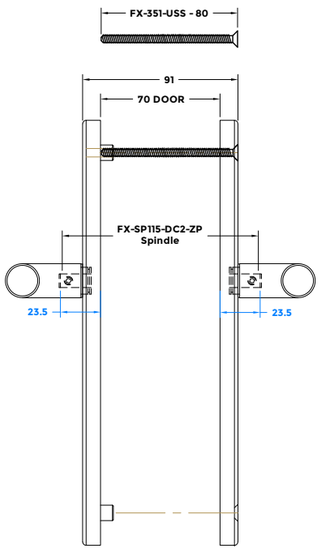

FX-DFP65
65mm Thick Door

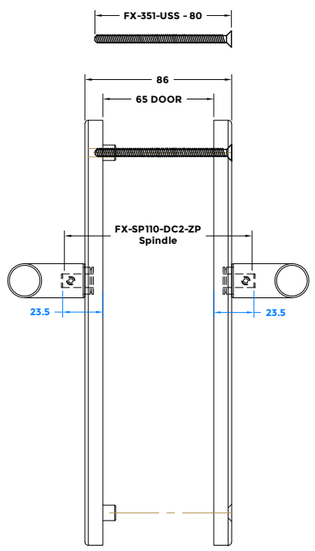

FX-DFP60
60mm Thick Door

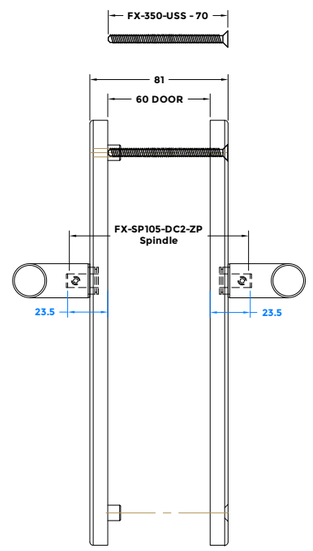

FX-DFP55
55mm Thick Door

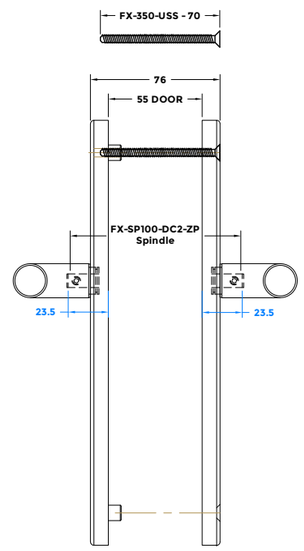

FX-DFP50
50mm Thick Door

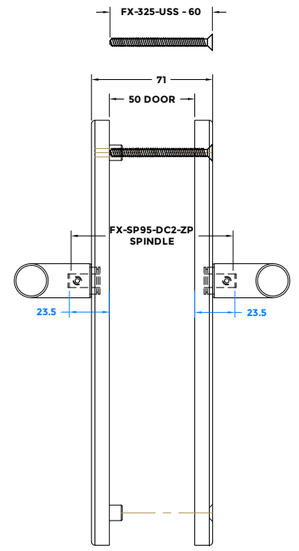

FX-DFP45
45mm Thick Door

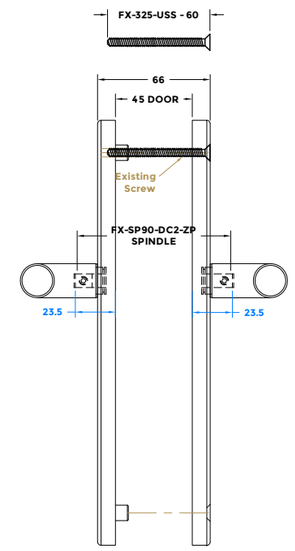

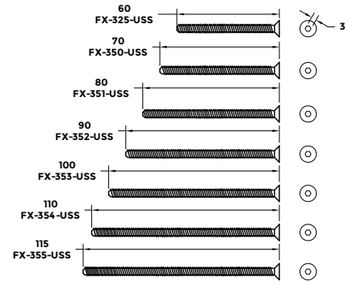

For other door thickness sizes not states the following is required.
Spindle Length = DOOR THICKNESS + 46mm
(Cut 23mm from each end)

FX-DFP105
105mm Thick Door

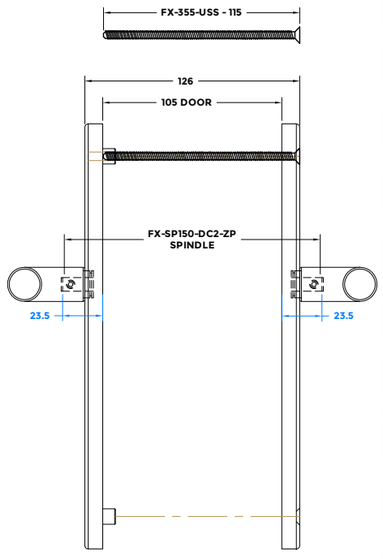

FX-DFP100
100mm Thick Door

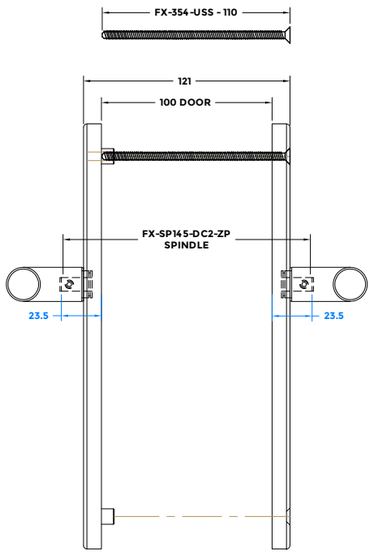

FX-DFP90
90mm Thick Door

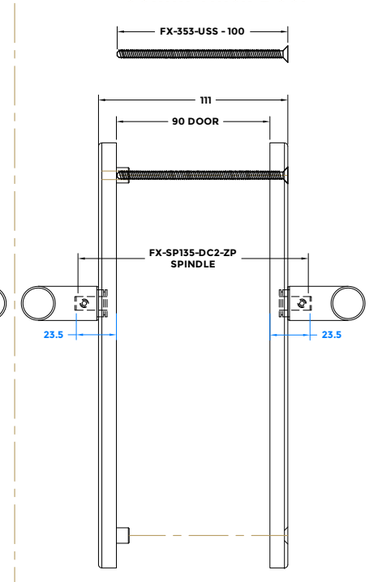

FX-DFP85
85mm Thick Door

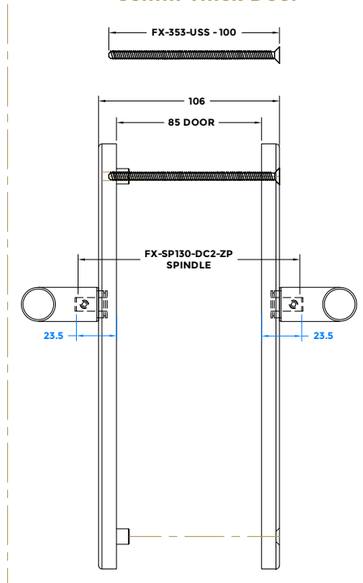

FX-DFP80
80mm Thick Door

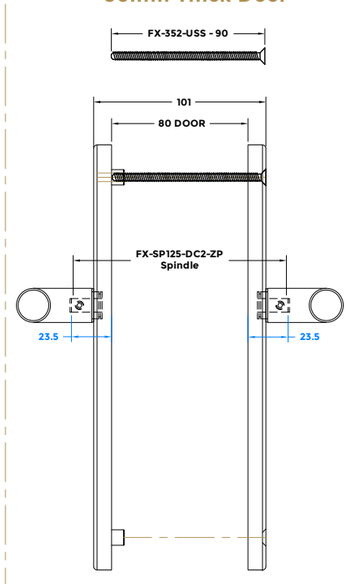

FX-DFP75
75mm Thick Door

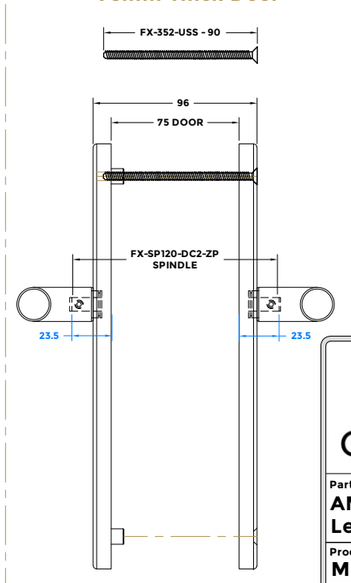

COASTAL
coastal-group.com
Shaping the future.

Part Number / Drawing Title:
AML096 /EGC096
Lever on Slim Backplate

Product Range:
MPL Door Handles

Material:	316 Stainless Steel
Additional Info:	DOOR THICKNESS GUIDE
Date Drawn:	28/08/2026
Drawn By:	Philip Walklett
Part Number:	AML096 /EGC096
File Name:	DOOR THICKNESS GUIDE.dwg
Revision:	C
Drawing Scale:	Not to Scale
Sheet Number:	1 of 1

THIRD ANGLE PROJECTION

This drawing and specification are the property of Coastal Specialist Ironmongery Ltd, they are issued in strict confidence and shall not be reproduced, copied or used without written permission.
E&OE - All dimensions are specified in mm.

Din A3 - Landscape