Drawing Revision History		
Revision	Description/ Change	Date
A	Release	27/02/18
B	Release to New template	11/09/24

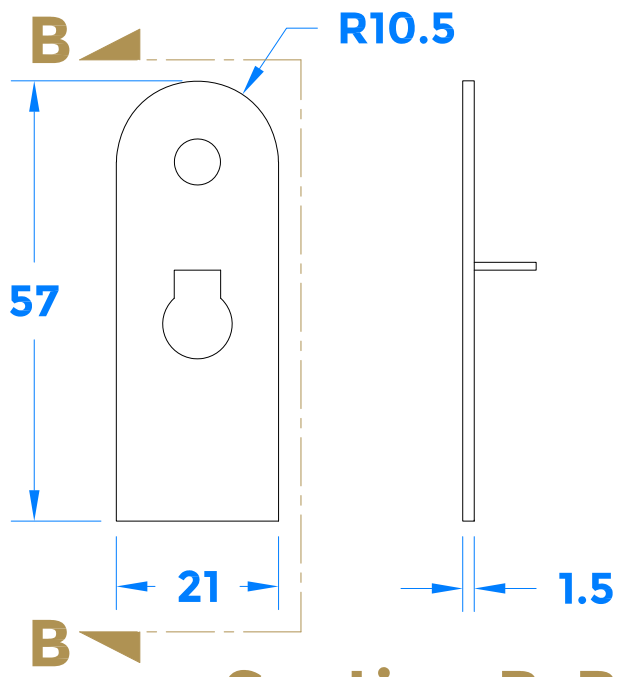

Section B-B
Cover Plates

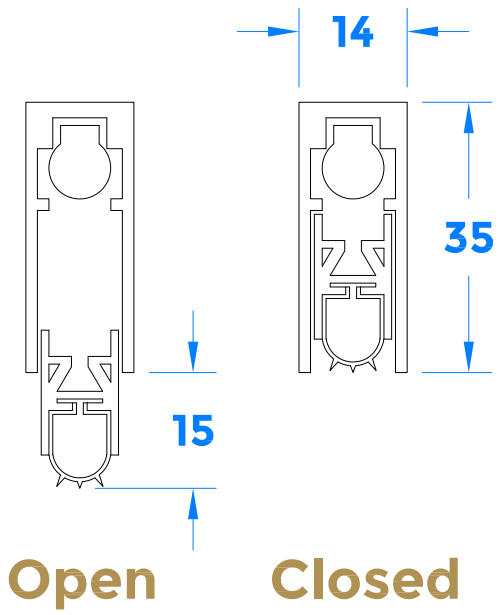

Section A-A

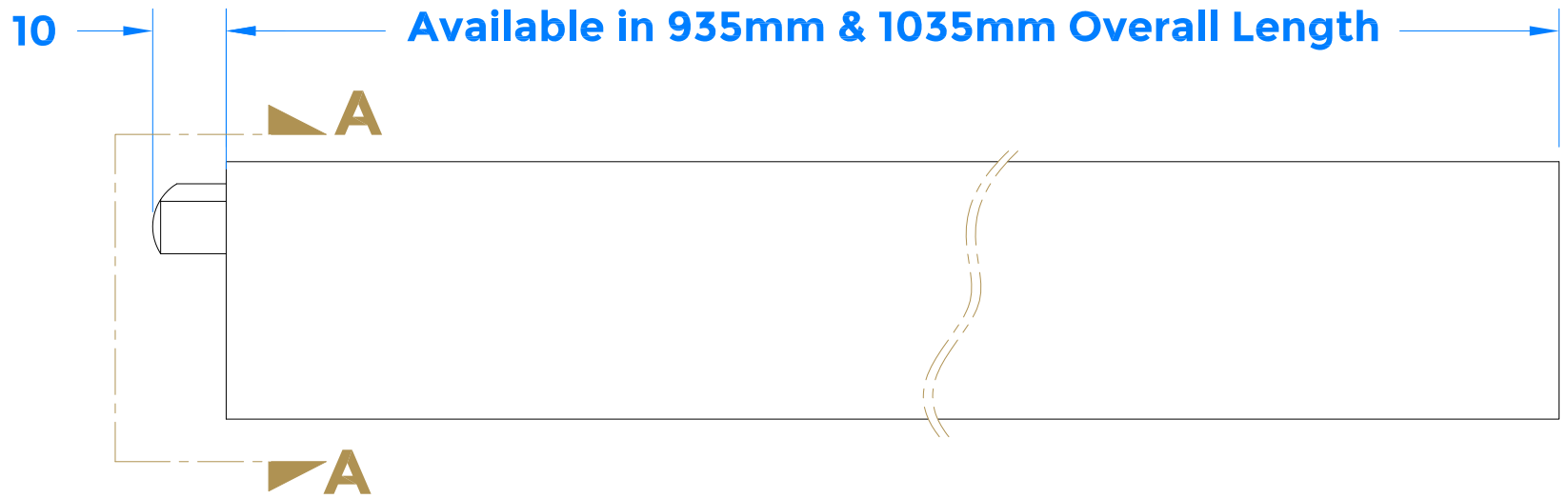

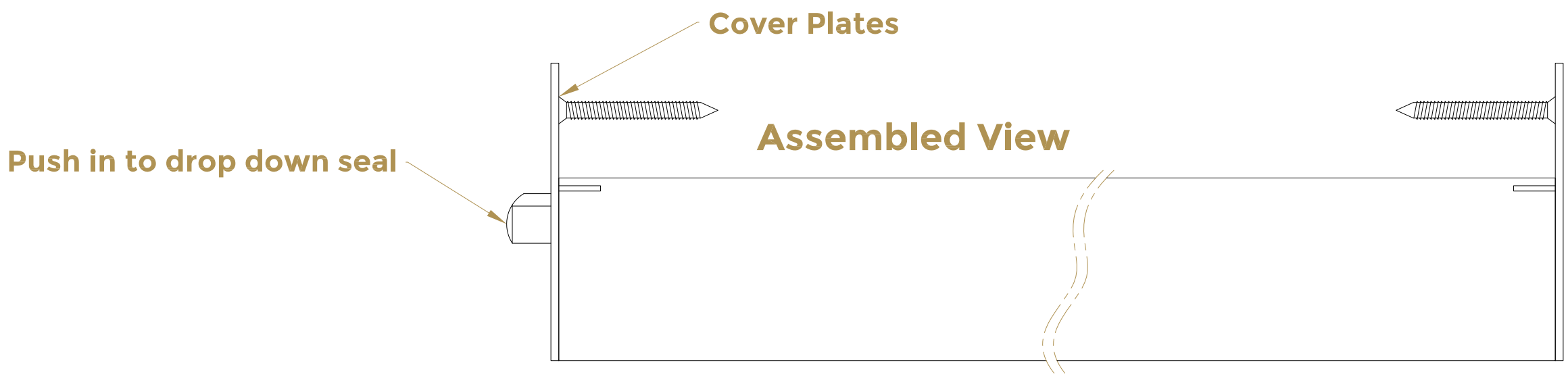

Assembled View

COASTAL

coastal-group.com

Shaping the future.

Part Number / Drawing Title:

IS8010
Automatic Drop Down Seal

Product Range:
Seals

Material:	
Additional Info:	
Date Drawn:	11/09/24
Drawn By:	Roger Phillips
Part Number:	
File Name:	CG-IS8010.dwg
Revision:	B
Drawing Scale:	1:1@A3
Sheet Number:	1 of 1

THIRD ANGLE PROJECTION

This drawing and specification are the property of Coastal Specialist Ironmongery Ltd, they are issued in strict confidence and shall not be reproduced, copied or used without written permission.
E&OE - All dimensions are specified in mm.

Din A3 - Landscape