Drawing Revision History		
Revision	Description/Change	Date
A-RP	Release to Coastal Template	09/07/25

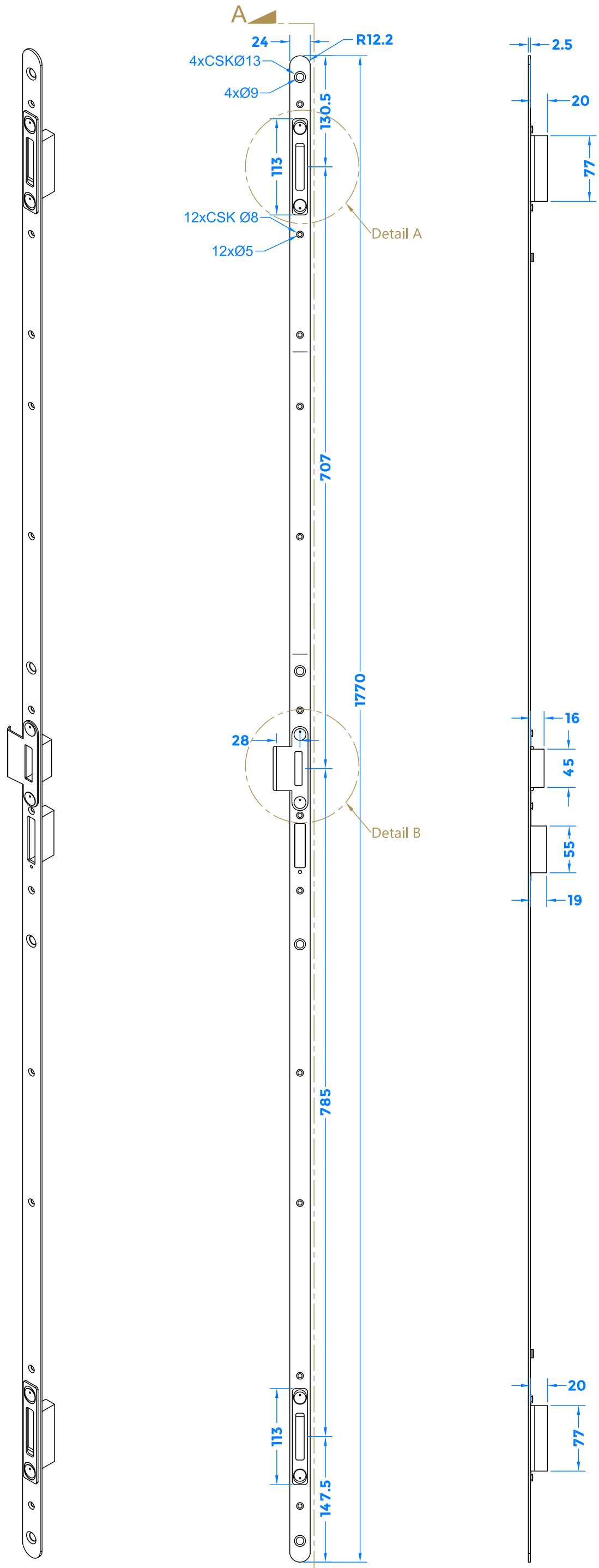

Isometric View

Section A-A

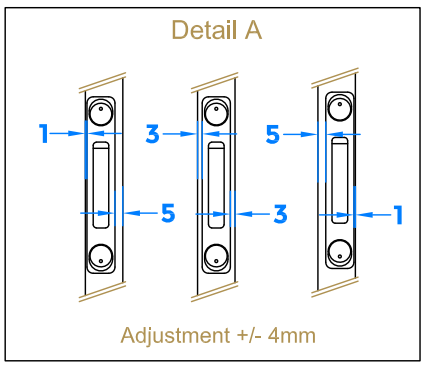

Left Hand Shown, Right Hand Opposite

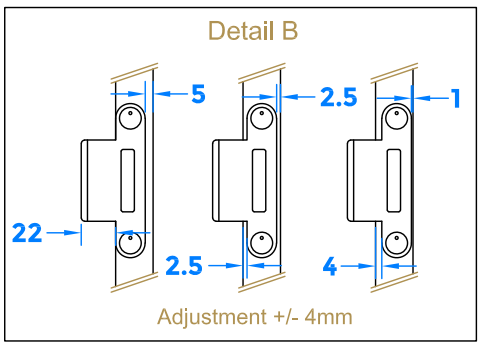

COASTAL

coastal-group.com

future.

Part Number /Drawing Title:

MK28-2-SV
One Piece Raduis End Keep

Product Range:

One Piece Adjustable Keep

Material:	
Additional Info:	24mm Faceplate
Date Drawn:	09/07/25
Drawn By:	Roger Phillips
Part Number:	MK28-2-SV
File Name:	CG-MK28-2-SV.dwg
Revision:	A
Drawing Scale:	Not To Scale
Sheet Number:	1 of 1

THIRD ANGLE PROJECTION

This drawing and specification are the property of Coastal Specialist Ironmongery Ltd, they are issued in strict confidence and shall not be reproduced, copied or used without written permission.
E&OE - All dimensions are specified in mm.

Din A3 - Portrait