Drawing Revision History		
Revision	Description/ Change	Date
A	Release	18/09/24

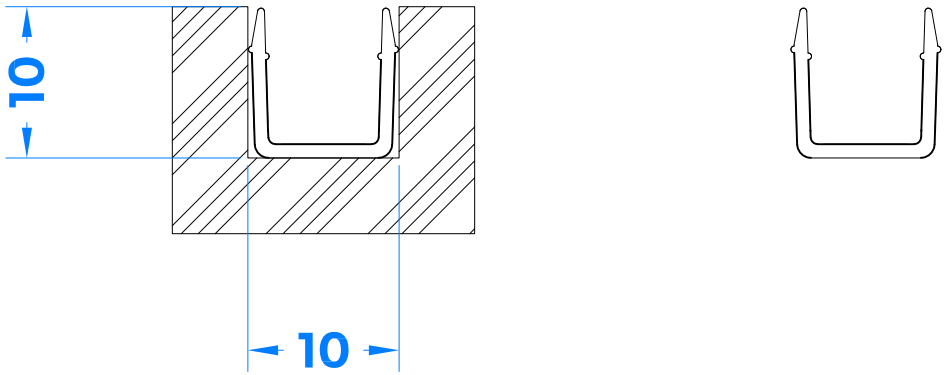

coastal-group.com

Shaping the future.

COASTAL

Part Number / Drawing Title:

RT10 Sliding Sash Retaining Profile for Parting Bead

Product Range:

Seals

Material:	
Additional Info:	
Date Drawn:	19/09/24
Drawn By:	Roger Phillips
Part Number:	RT10
File Name:	CG-RT10.dwg
Revision:	A
Drawing Scale:	Not To Scale
Sheet Number:	1 of 1

THIRD ANGLE PROJECTION

This drawing and specification are the property of Coastal Specialist Ironmongery Ltd, they are issued in strict confidence and shall not be reproduced, copied or used without written permission.

E&OE - All dimensions are specified in mm.

Din A4 - Landscape