Drawing Revision History		
Revision	Description /Change	Date
A	Release	05/11/2021

External Security Escutcheon

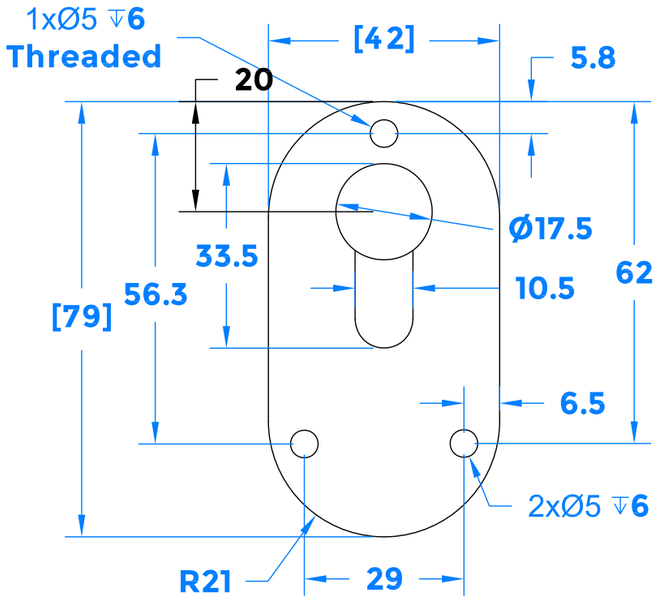

Section A-A

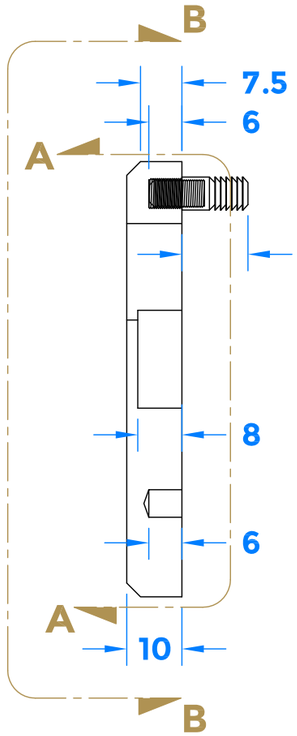

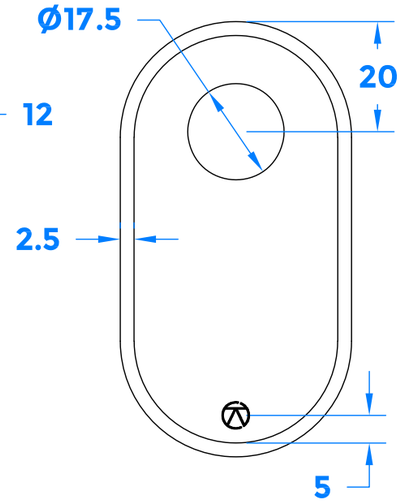

Section B-B

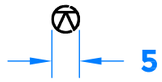

Internal Cylinder Pull

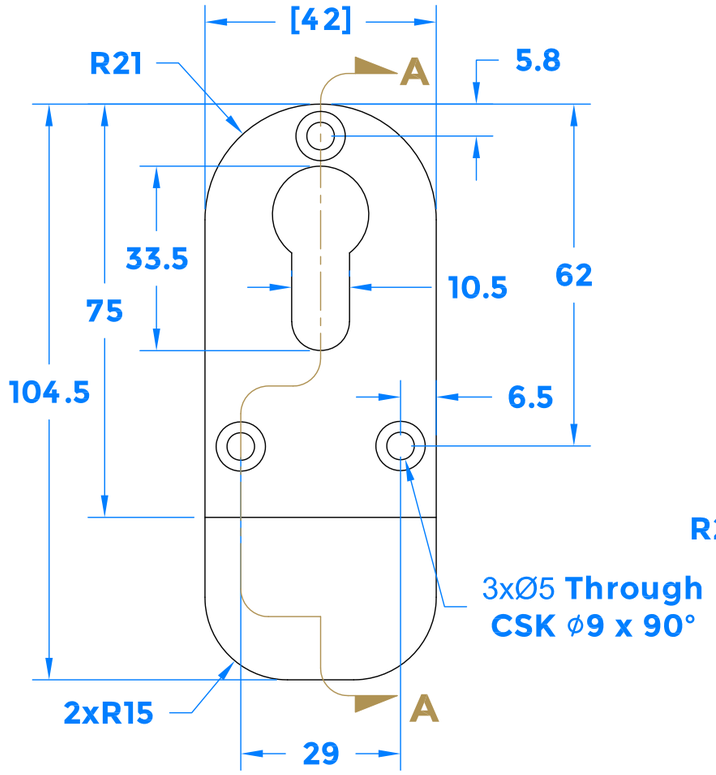

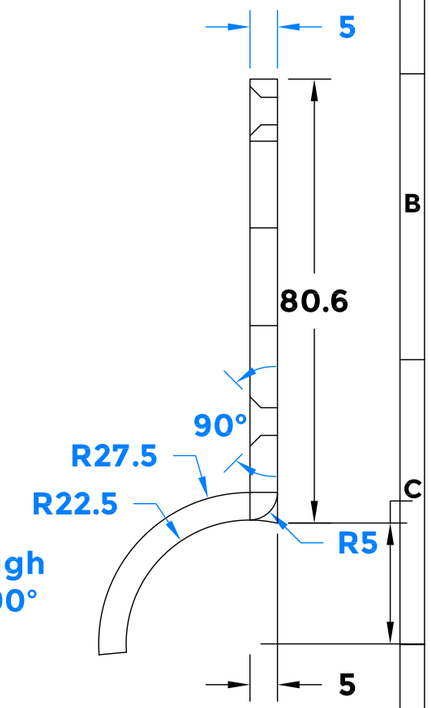

Section A-A

Assembled View

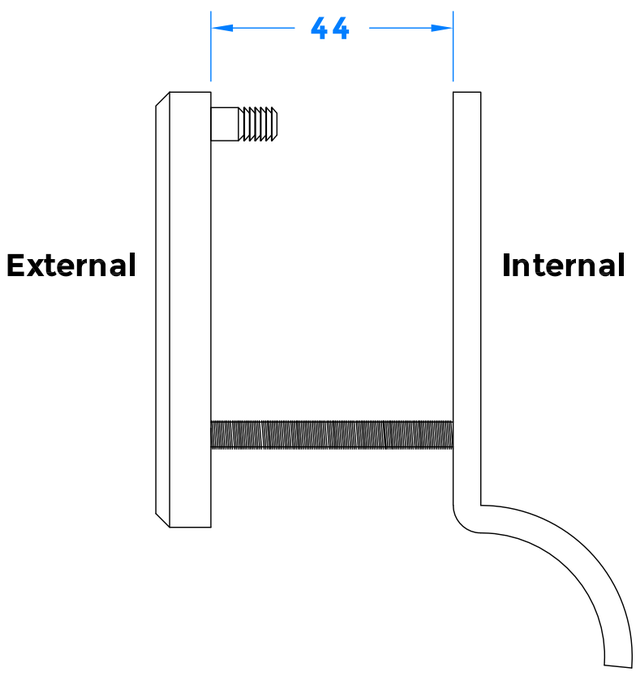

Fixings

2x M5x55mm CSK Socket Head Screws

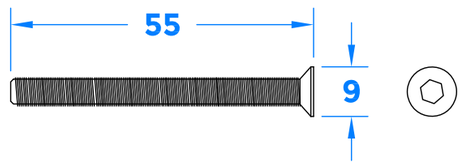

1xWood Screw

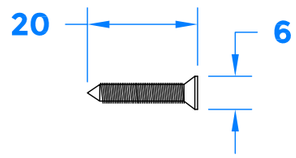

3mm Allen Key

COASTAL
coastal-group.com
Shaping the future.

Part Number /Drawing Title:	SE40A - Security Escutcheon / Inside Cylinder Pull Set
Product Range:	Door Furniture
Material:	316 Stainless Steel
Additional Info:	Suits Door Thickness of 44mm
Date Drawn:	05/11/2021
Drawn By:	Phillip Walklett
Part Number:	SE40A
File Name:	SE40A.dwg
Revision:	A
Drawing Scale:	Not to Scale
Sheet Number:	1 of 1

THIRD ANGLE PROJECTION

This drawing and specification are the property of Coastal Specialist Ironmongery Ltd. they are issued in strict confidence and shall not be reproduced, copied or used without written permission.
E&OE - All dimensions are specified in mm.

Din A3 - Landscape