Drawing Revision History		
Revision	Description/ Change	Date
A	Release for Production	03/02/25

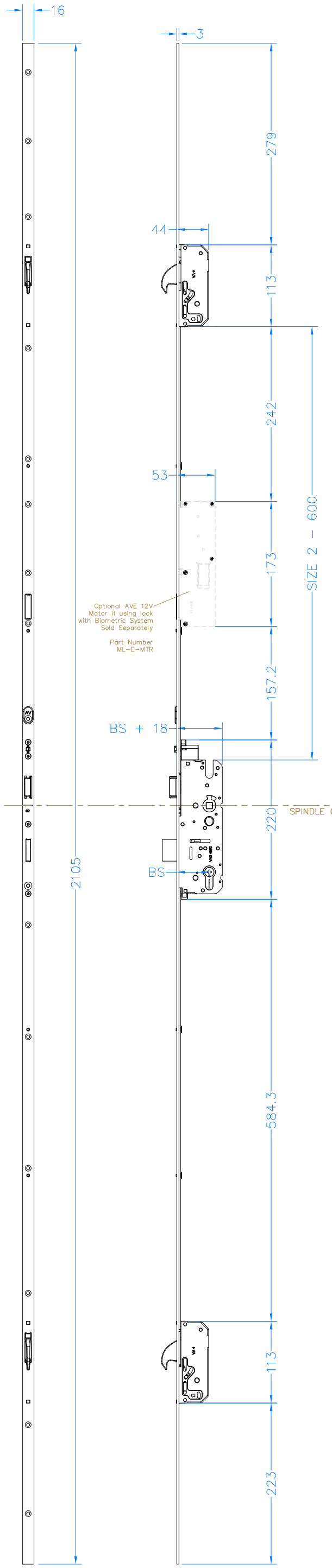

Routing Preperation

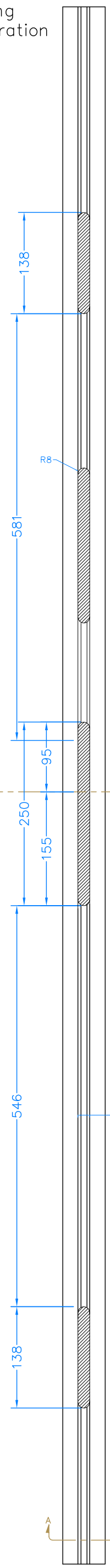

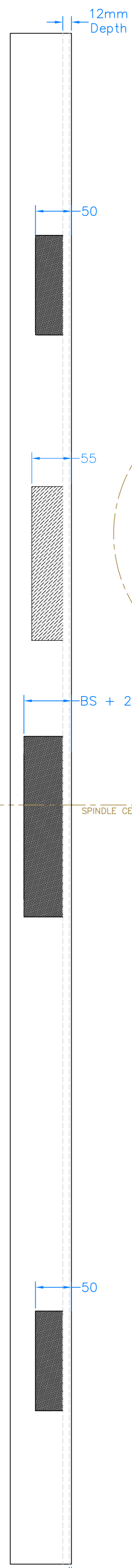

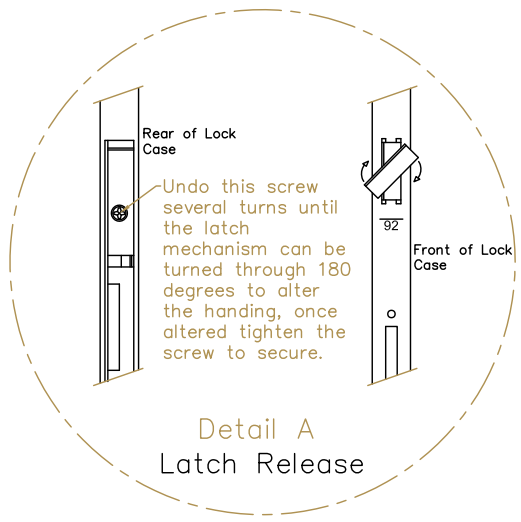

Detail A
Latch Release

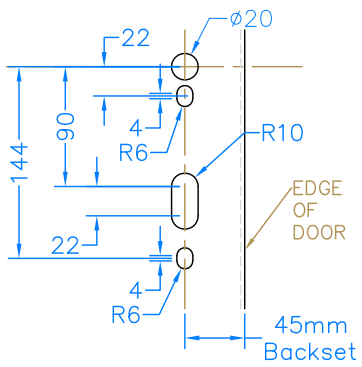

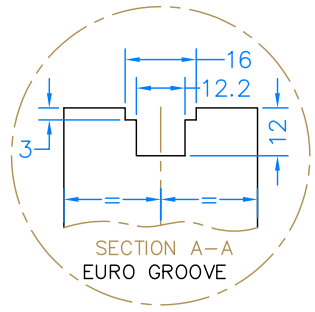

SECTION A-A
EURO GROOVE

COASTAL

coastal-group.com

the future.

Part Number / Drawing Title:	ML4126S Premium Automatic Hook Bolt Lock (AV4)
Product Range:	Door Lock
Material:	Silver
Additional Info:	
Date Drawn:	03/02/25
Drawn By:	Roger Phillips
Part Number:	ML4126S-45-2-SV
File Name:	ML2146S-45-2-SV.dwg
Revision:	A
Drawing Scale:	Not To Scale
Sheet Number:	1 of 1

THIRD ANGLE PROJECTION

This drawing and specification are the property of Coastal Specialist Ironmongery Ltd, they are issued in strict confidence and shall not be reproduced, copied or used without written permission. E&OE - All dimensions are specified in mm.

Din A3 - Portrait