Drawing Revision History		
Revision	Description/ Change	Date
A	Released	11/04/25

Inside lever shown

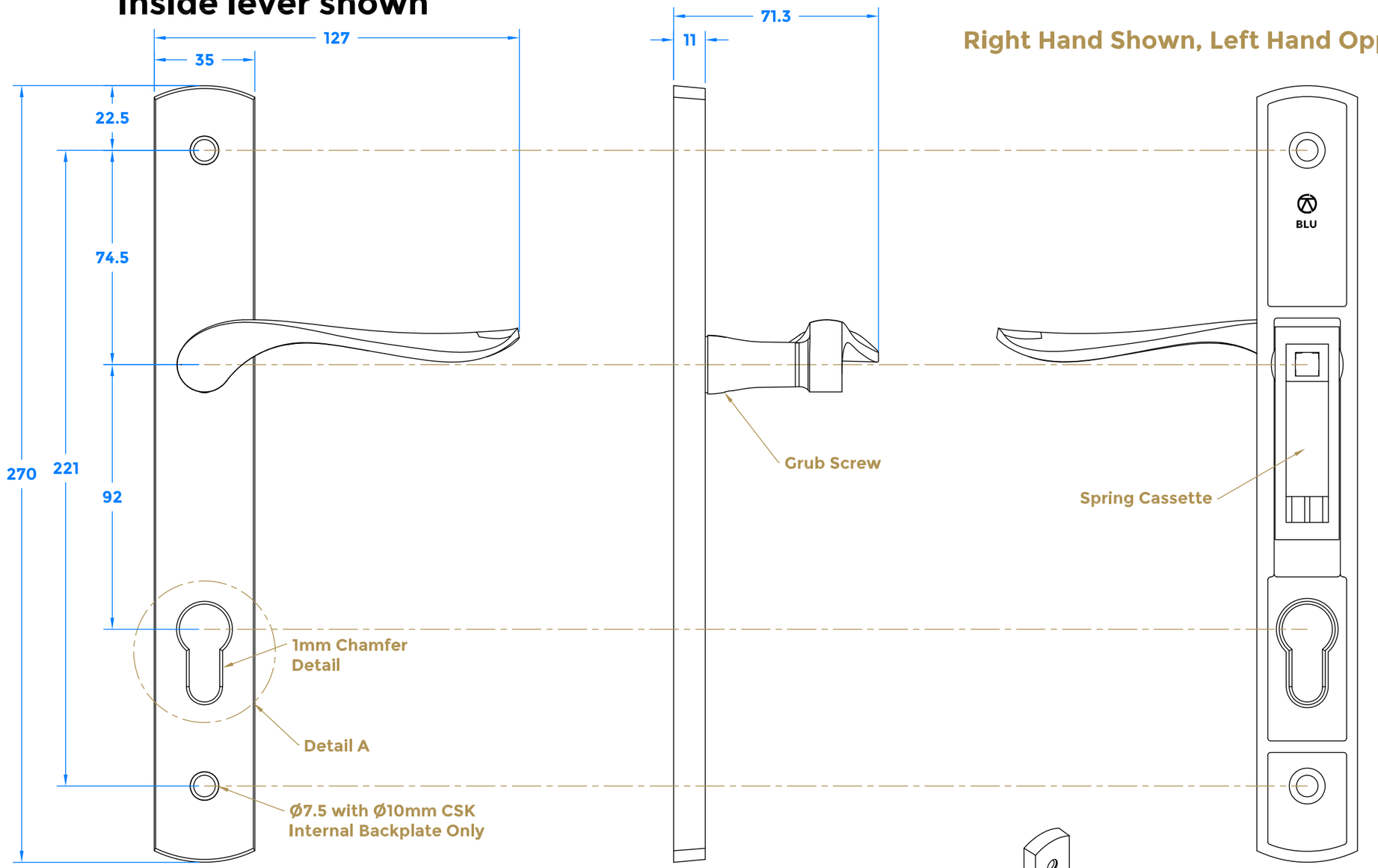

Right Hand Shown, Left Hand Opposite

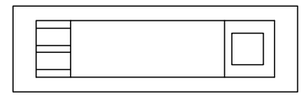

2 x Spring Cassettes

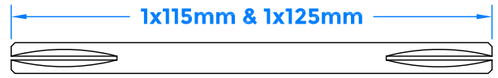

115 & 125mm Spindles DC2

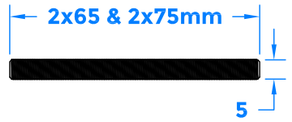

FX391 - Threaded Bars

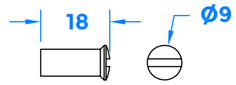

2 x FX390

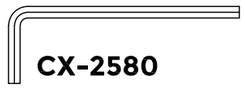

CX-2580

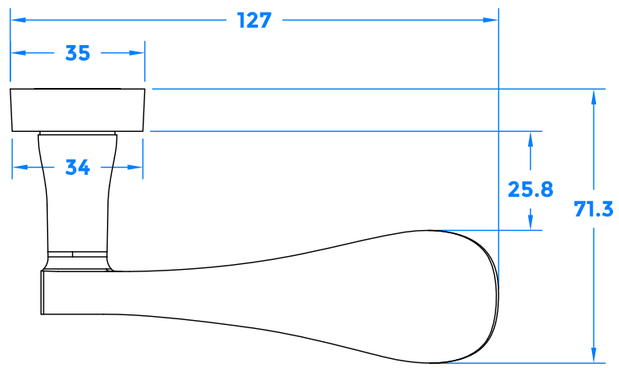

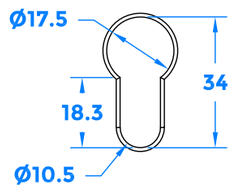

Detail A

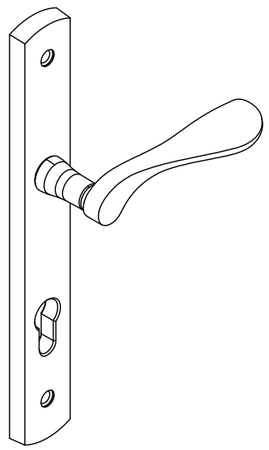

Isometric View

COASTAL

coastal-group.com

Shaping the future.

Part Number / Drawing Title:

REG095-RH
Regent Lever on Backplate

Product Range:

Door Handles

Material:	316 Stainless Steel
Additional Info:	Back to Back Fixing
Date Drawn:	11/04/2025
Drawn By:	Philip Walklett
Part Number:	REG095-RH
File Name:	REG095.dwg
Revision:	A
Drawing Scale:	Not to Scale
Sheet Number:	1 of 1

THIRD ANGLE PROJECTION

This drawing and specification are the property of Coastal Specialist Ironmongery Ltd, they are issued in strict confidence and shall not be reproduced, copied or used without written permission.

E&OE - All dimensions are specified in mm.

Din A3 - Landscape